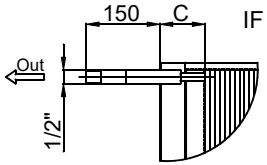

IF THE NUMBER OF CIRCUIT = 1

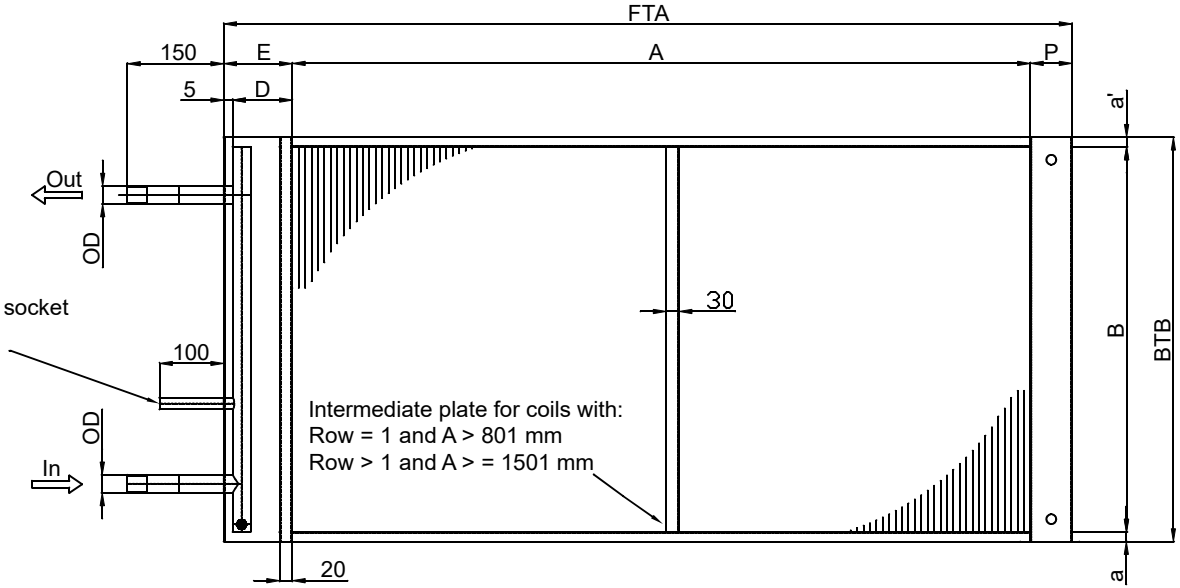

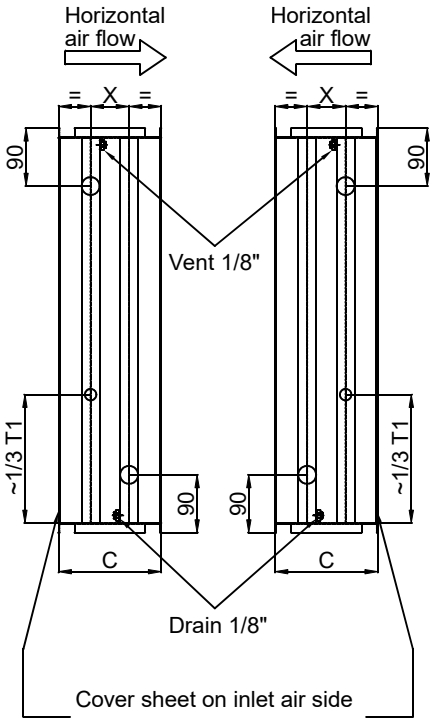

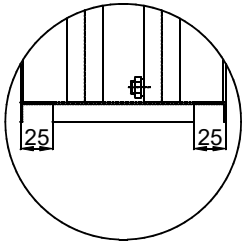

DETAIL OF THE CUT
ON TOP AND BOTTOM
FOR THE RAIL SYSTEM

D	
DN15	90
DN20	95
DN25	100
DN32	110
DN40	115
DN50	125
DN65	140
DN80	155
DN100	173
DN125	220

GX	a	a'	FTA	FTB	B
10	17	27	IN ACCORDING WITH ORDER		
11	17	27	IN ACCORDING WITH ORDER		
12	17	27	IN ACCORDING WITH ORDER		
14	17	27	IN ACCORDING WITH ORDER		
16	17	27	IN ACCORDING WITH ORDER		
18	17	27	IN ACCORDING WITH ORDER		
20	17	27	IN ACCORDING WITH ORDER		
22	17	27	IN ACCORDING WITH ORDER		
24	17	27	IN ACCORDING WITH ORDER		
27	24	45	IN ACCORDING WITH ORDER		
29	24	45	IN ACCORDING WITH ORDER		
31	24	45	IN ACCORDING WITH ORDER		
35	45	45	3342	1640	1550
38	45	45	3342	1940	1850
41	45	45	3942	1940	1850
44	45	45	3942	2240	2150

NOTE:
Coupling Ø1/4" only on order required
- LIFTING HOLES ø12.8
- B = numer of tubes * (P25 = 25)
- Y1 = a + (OD / 2) - 1
- Y2 = (a'+10) + (OD / 2) - 1

ALL PLATES WITH COUNTERFOLDS

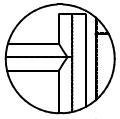

if a+1/2ø connection < 90

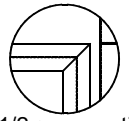

if a+1/2ø connection => 90

N.	DESCRIPTION	THICKNESS	MATERIAL	NOTES
8				
7				
6				
5	CONNECTIONS		ASME SA106M Gr.B	
4	HEADERS		Cu-DHP EN 12735-1	
3	FRAME	DBM Std.	FeZn-DX51D+Z 275 EN10346	
2	FINS	0.10	Al-Alloy 8006	
1	EXCHANGE TUBES	0.30	Cu-DHP EN 12735-2	

MATERIALS AND THICKNESS

REV.	DESCRIPTION	PREP'D	CHK'D	APPR'D	DATE
0	UPTADE FOR GX 35,38,41,44	ML	AP	ML	22/12/21
0	FIRST ISSUE	MG	LP	MG	01/07/21

OPERATING CONDITION		
TUBE SIDE	Pmax	10 barg
	Tmin/Tmax	-10°/100°C
FIN SIDE	Pmax	- barg at -°C
	Tmin/Tmax	-°--°C at - barg
TEST PRESSURE		24 barg
FILE		STD.-HEATING COILS.dwg

GENERAL TOLERANCES
ACCORDING TO
DBM-TOL-N-R00

[mm-A3]

CUSTOMER	SYSTEMAIR UAB
CODE	BIG SIZE- AHU - HEATING COILS
N. PIECES	INTERNAL FLUID
WEIGHT kg	VOLUME
ORDER N.	SCALE
OFFER N.	DRAWING N. P25
CONFIRMATION N.	AHU-HEATING COILS

IL PRESENTE DISEGNO E' DI PROPRIETA' ESCLUSIVA DELLA DBM S.p.A. ESSO NON PUO' ESSERE USATO, RIPRODOTTO, DISTRIBUITO O ESIBITO SENZA L'ESPRESSO CONSENSO DELLA DBM S.p.A.

THIS DRAWING IS EXCLUSIVE PROPERTY OF DBM S.p.A. IT MUST NOT BE USED, REPRODUCED, DISTRIBUTED OR EXHIBITED WITHOUT EXPRESSED PERMISSION OF DBM S.p.A.

D.B.M. SpA Via U.La Malfa, 10 28040 Varallo Pombia-Novara-ITALY Tel. +39 0321 956794 Fax +39 0321 957266 e-mail: info@dbmcoils.com